MECCANICA SEGRINO S.r.l.

22035 CANZO (CO) Italia - Via Tagliamento N°10
Tel. +39 031682775- +39 0316730637 Fax. +39 031682518
www.meccanicasegrino.com – info@meccanicasegrino.com

Certificate n°4892/3

Certificate n° IT-53861

MONOLITHIC INSULATING JOINTS Class 150 specification

Design temperature	Electrical insulation resistance in dry air	Dielectric resistance in dry air	Design Pressure	Test Pressure
-10°C+70°C	≥100 Mohm	3.5 KV	25kg/cm^2	38kg/cm^2

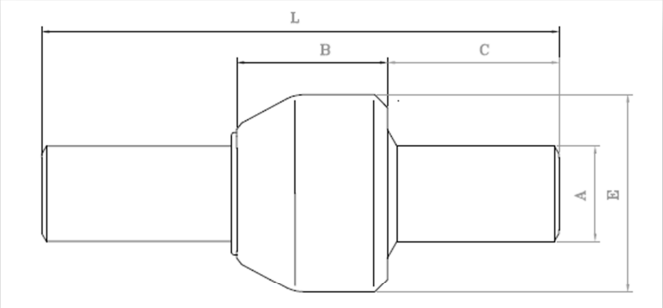

- **Spigot: pipe API 5L gr.B seamless or equivalent**
- **Hot forged steel bell: ASTM A 105 or equivalent**
- **Insulating steel gasket: NBR-nithrile/butan**
- **Insulating spacers: polycarbonate**
- **Internal lining: epoxy resin**
- **Ends to be welded**
- **Manufactured and tested in accordance to UNI CIG 10285**

NB: The dimensions reported in the table are in millimeters (mm)

Product code	ND	A	E	C	B	L	Weight (in Kg)
P015	1/2"	21.3	50	97	36	230	0.8
P020	3/4"	26.7	55	96	38	230	1
P025	1"	33.4	63	104	42	250	1.2
P032	1" 1/4	42.2	74	117	46	280	1.7
P040	1" 1/2	48.3	80	121	48	290	2.1
P050	2"	60.3	95	125	50	300	2.8
P065	2" 1/2	76.1	114	139	52	330	4.5
P080	3"	88.9	127	172	56	400	6
P100	4"	114.3	153	168	64	400	9
P125	5"	141.3	192	213	74	500	14
P150	6"	168.3	219	210	80	500	20
P200	8"	219.1	273	205	90	500	30
P250	10"	273.0	340	290	120	700	57
P300	12"	323.9	398	283	134	700	65

Certificates issued: EN 10204 3.1 and CE compliance

CE Ex **II 2 GD Zone 1 e 21 d T5** **Technical file : A01-MS**	**INSULATION JOINT**
Technical File : **A01-MS**	Year: **2014**