MECCANICA SEGRINO S.r.l.
22035 CANZO (CO) Italia - Via Tagliamento N°10
T1. +39 031682775- T2.+39 0316730637
www.meccanicasegrino.com – info@meccanicasegrino.com

Certificate n°4892/3

Certificate n° IT-53861

MONOLITHIC INSULATING JOINTS Class PN10 specification

Working Temperature	Electric insulation	Dielectric resistance	Testing pressure	Working pressure
-10°C+70°C	10 Mohm	3.0 KV	15kg/cm^2	10kg/cm^2

FF-Female Female

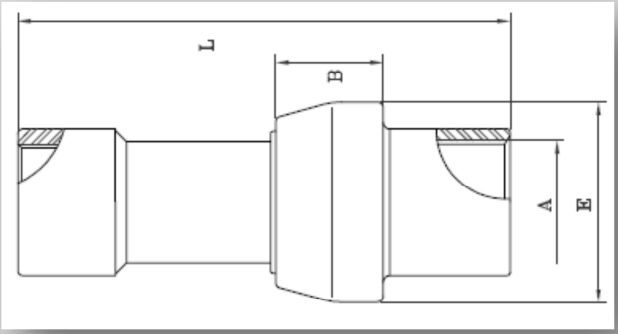

- **Hot forged socket: ASTM A 105 or equivalent**
- **Hot forged spigot: API 5L gr.B or equivalent**
- **Insulating ring in polycarbonate**
- **Gasket ring in Hytrel 40 D Dupont**
- **Epoxyphenolic painting**
- **Thread ends: ISO7/EN10226-1**
- **Manufactured and tested in accordance to UNI CIG 10284**

Product Code	ND	A	E	B	L	Weight (in Kg)
FF020	3/4"	26,7	53	30	135	0,6
FF025	1"	33,4	60	32	142	0,9
FF032	1" 1/4	42,2	71	35	170	1,3
FF040	1" 1/2	48,3	77	37	175	1,5
FF050	2"	60,3	90	38	180	2,2

NB: The dimensions reported in the table are in millimeters (mM)

Certificates issued: EN 10204 3.1 and CE compliance

CE Ex	**INSULATION JOINT** **II 2 GD Zone 1 e 21 d T5** **Technical file: A02-MS**
Technical File : **A02-MS**	Anno: **2014**